FEATURES

- Dual output 4+1 and 3+2 phase PWM Controllers
- Easiest layout and fewest pins in the industry
- Fully supports AMD® SVI1 & SVI2 with dual OCP and Intel® VR12 & VR12.5
- Overclocking & Gaming Mode
- Switching frequency from 200kHz to 2MHz per phase
- IR Efficiency Shaping Features including Dynamic Phase Control and Automatic Power State Switching
- Programmable 1-phase or 2-phase operation for Light Loads and Active Diode Emulation for Very Light Loads
- IR Adaptive Transient Algorithm (ATA) on both loops minimizes output bulk capacitors and system cost
- Auto-Phase Detection with auto-compensation
- Per-Loop Fault Protection: OVP, UVP, OCP, OTP, CFP
- I2C/SMBus/PMBus system interface for telemetry of Temperature, Voltage, Current & Power for both loops
- Multiple Time Programming (MTP) with integrated charge pump for easy custom configuration
- Compatible with IR ATL and 3.3V tri-state Drivers
- +3.3V supply voltage; -40°C to 85°C ambient operation
- Pb-Free, RoHS, 5x5mm, 40-pin, 0.4mm pitch QFN

DESCRIPTION

The IR3564A/70A is a dual-loop digital multi-phase buck controller designed for CPU voltage regulation and is fully compliant with AMD® SVI1 & SVI2 and Intel® VR12 & VR12.5 specifications.

The IR3564A/70A includes IR's Efficiency Shaping Technology to deliver exceptional efficiency at minimum cost across the entire load range. IR's Dynamic Phase Control adds/drops active phases based upon load current and can be configured to enter 1-phase operation and diode emulation mode automatically or by command.

IR's unique Adaptive Transient Algorithm (ATA), based on proprietary non-linear digital PWM algorithms, minimizes output bulk capacitors and Multiple Time Programmable (MTP) storage saves pins and enables a small package size. Device configuration and fault parameters are easily defined using the IR Digital Power Design Center (DPDC) GUI and stored in on-chip MTP.

The IR3564A/70A provides extensive OVP, UVP, OCP and OTP fault protection and includes thermistor based temperature sensing with VRHOT signal.

The IR3564A/70A includes numerous features like register diagnostics for fast design cycles and platform differentiation, simplifying VRD design and enabling fastest time-to-market (TTM) with "set-and-forget" methodology.

APPLICATIONS

- AMD® SVI1 & SVI2, Intel® VR12 & VR12.5 based systems
- Desktop & Notebook CPU VRs
- GPU & Memory VRs

BASIC APPLICATION

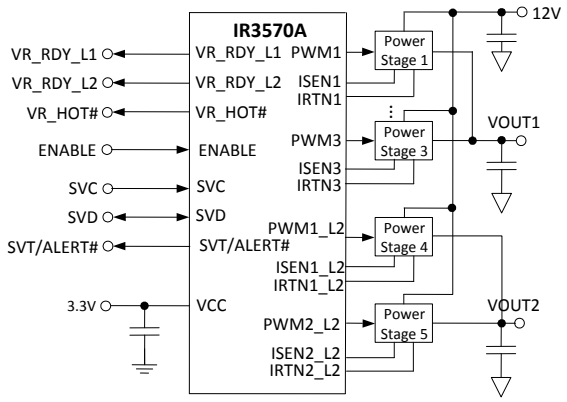

Figure 1: IR3564A/70A Basic Application Circuit

PIN DIAGRAM

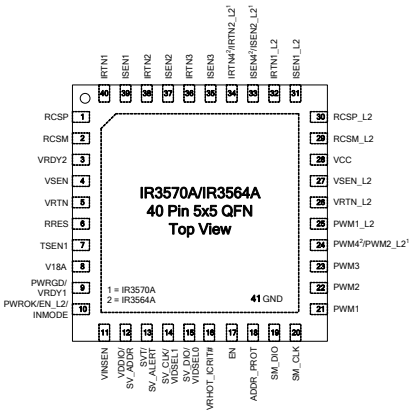

Figure 2: IR3564A/70A Package Top View

ORDERING INFORMATION

IR3564AM
IR3570AM

- **P/PBF** – Lead Free
- **TR** – Tape & Reel / **TY** - Tray
- **yy** – Configuration File ID
- **xx** – Customer ID
- Package Type (QFN)

Package	Packing Qty	Part Number	Programming
QFN	3000	**IR3564AMTRPBF** **IR3570AMTRPBF**	Default
QFN	3000	**IR3564AMxxyyTRP**[1] **IR3570AMxxyyTRP**[1]	Customer Configuration

Notes:

1. Customer Specific Configuration File, where xx = Customer ID and yy = Configuration File (Codes assigned by IR Marketing).

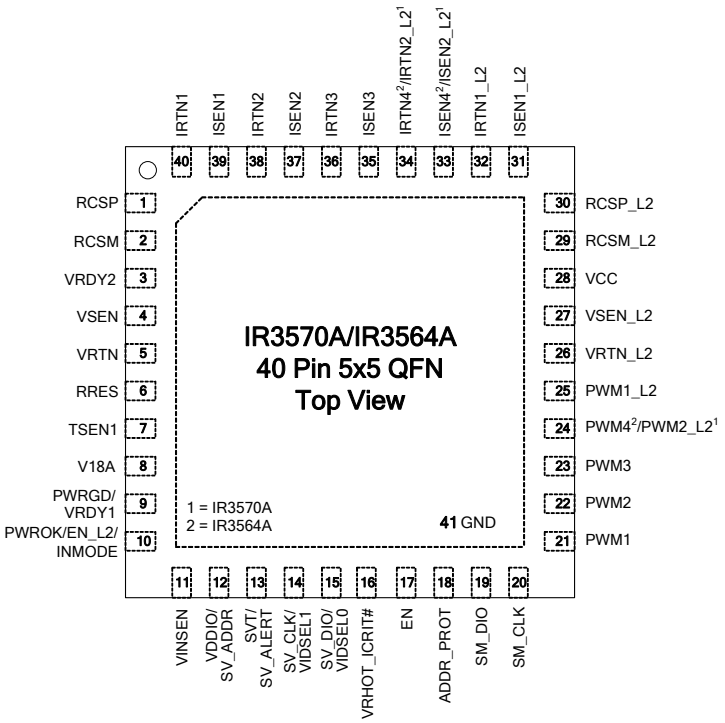

Figure 3: IR3564A/70A Pin Diagram Enlarge

TYPICAL APPLICATION DIAGRAM

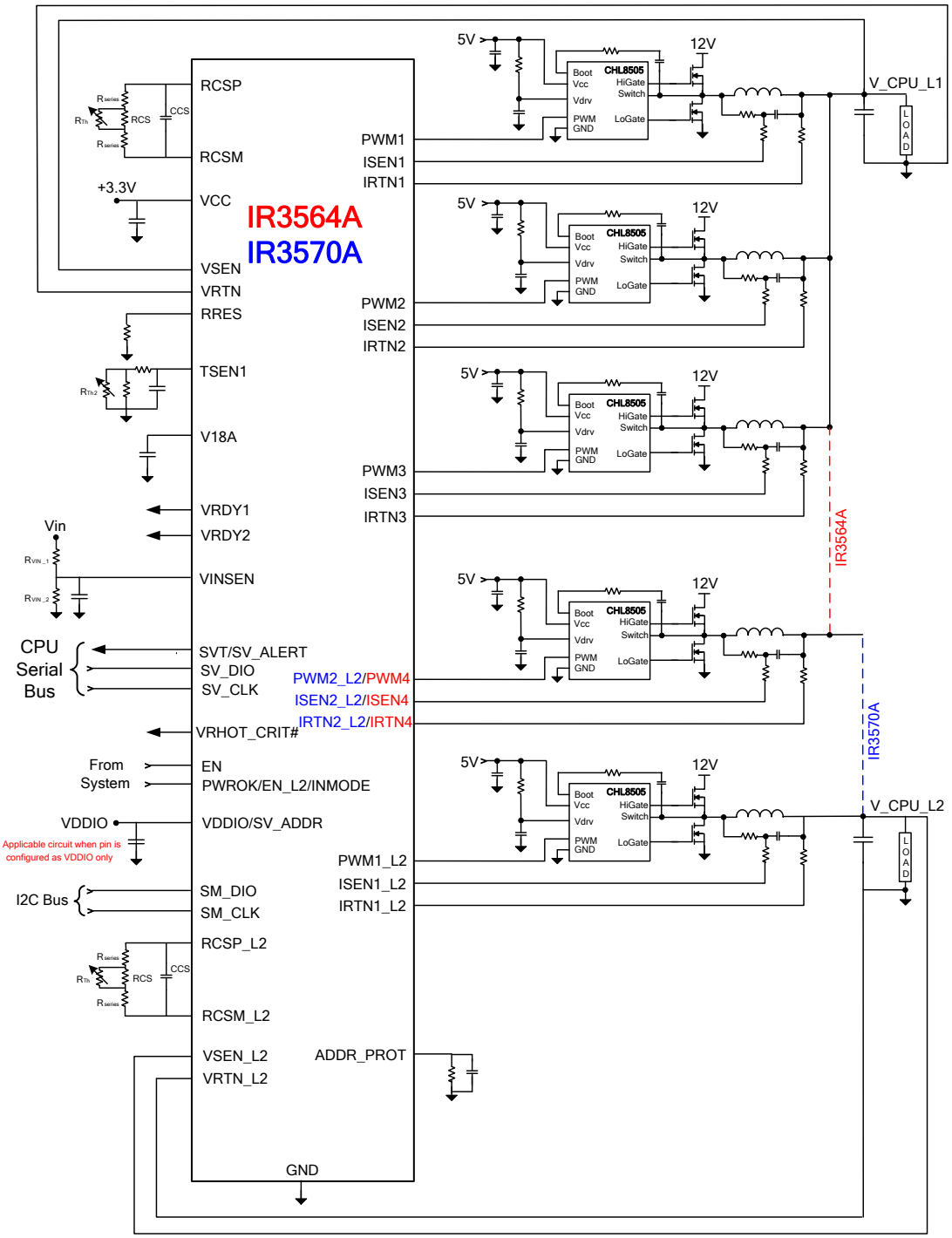

Figure 4: Dual-loop VR using IR3564A or IR3570A Controller and CHL8505 MOSFET Drivers in 4+1 or 3+2 Configuration

Data and specifications subject to change without notice.
This product will be designed and qualified for the Consumer market.
Qualification Standards can be found on IR's Web site.

International IOR Rectifier

IR WORLD HEADQUARTERS: 233 Kansas St., El Segundo, California 90245, USA Tel: (310) 252-7105
TAC Fax: (310) 252-7903
Visit us at www.irf.com for sales contact information.
www.irf.com